PERICOM®

www.pericom.com

Enabling High-speed Serial Connectivity

For all your Timing, Signal Integrity & Connectivity Needs

Telecom Segment Solutions

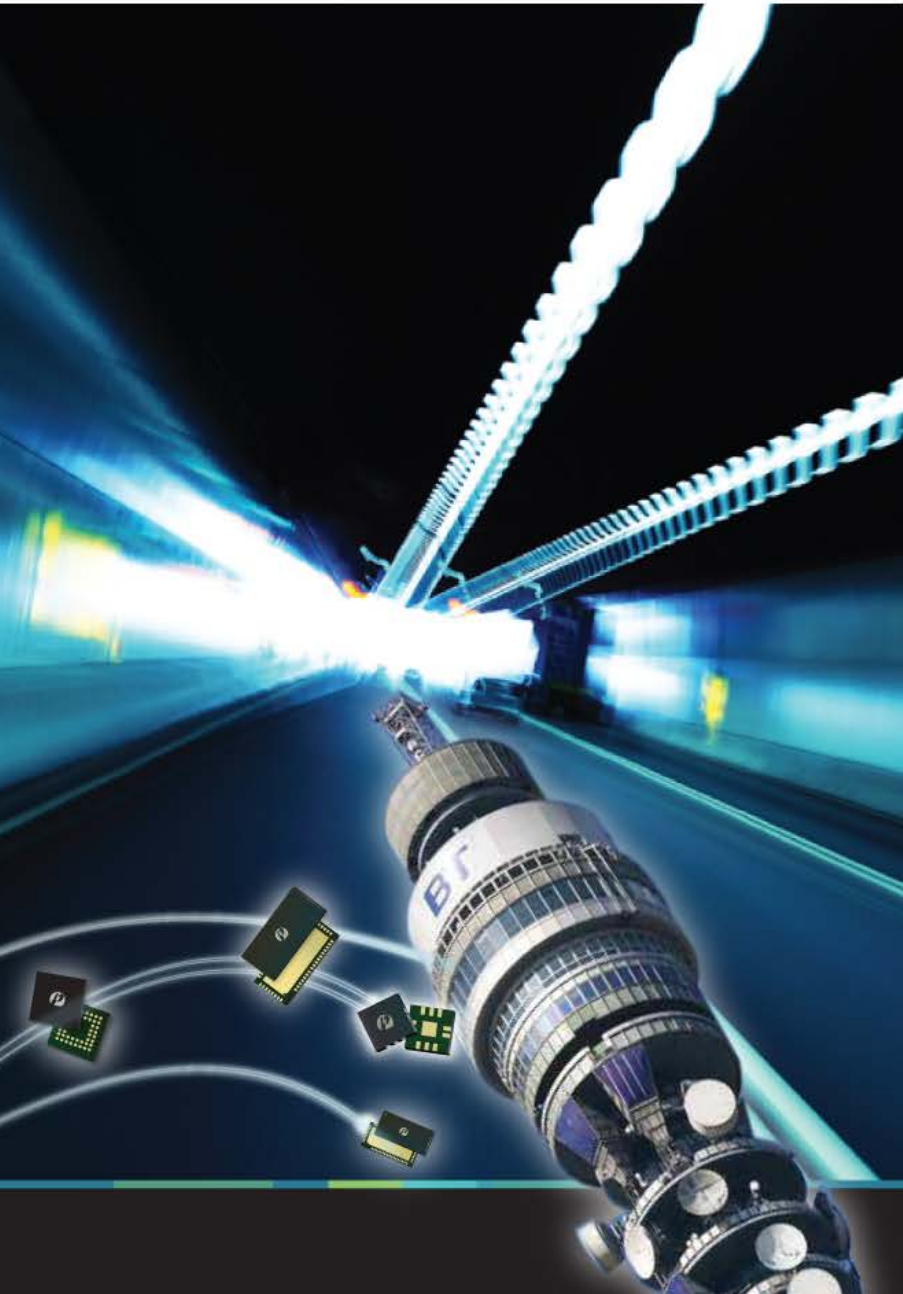

Pericom Offerings in Wireline Infrastructure

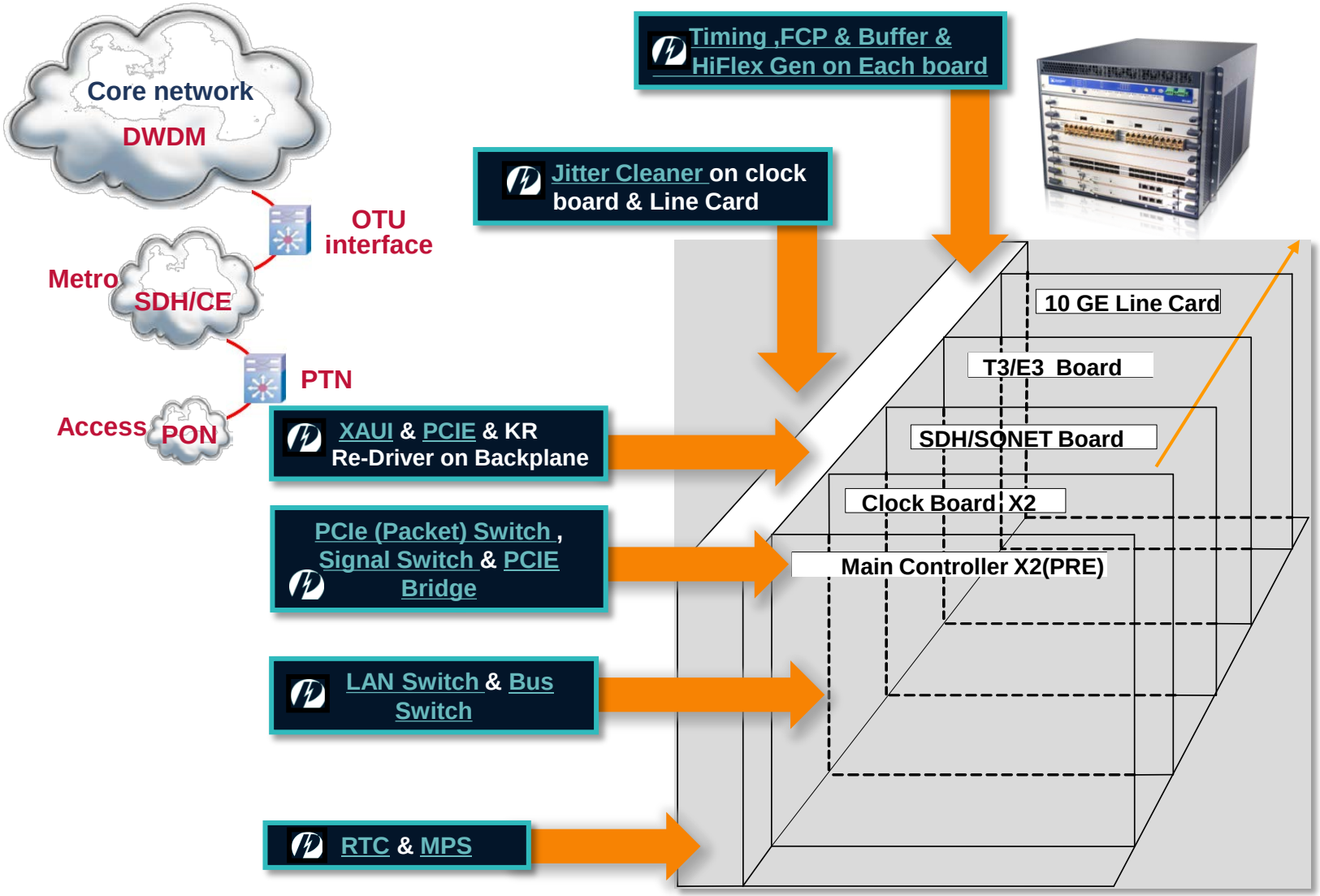

PERICOM
Confidential
Copyright Pericom Semiconductor Corp 2014

PI7C9X111 on SDH board

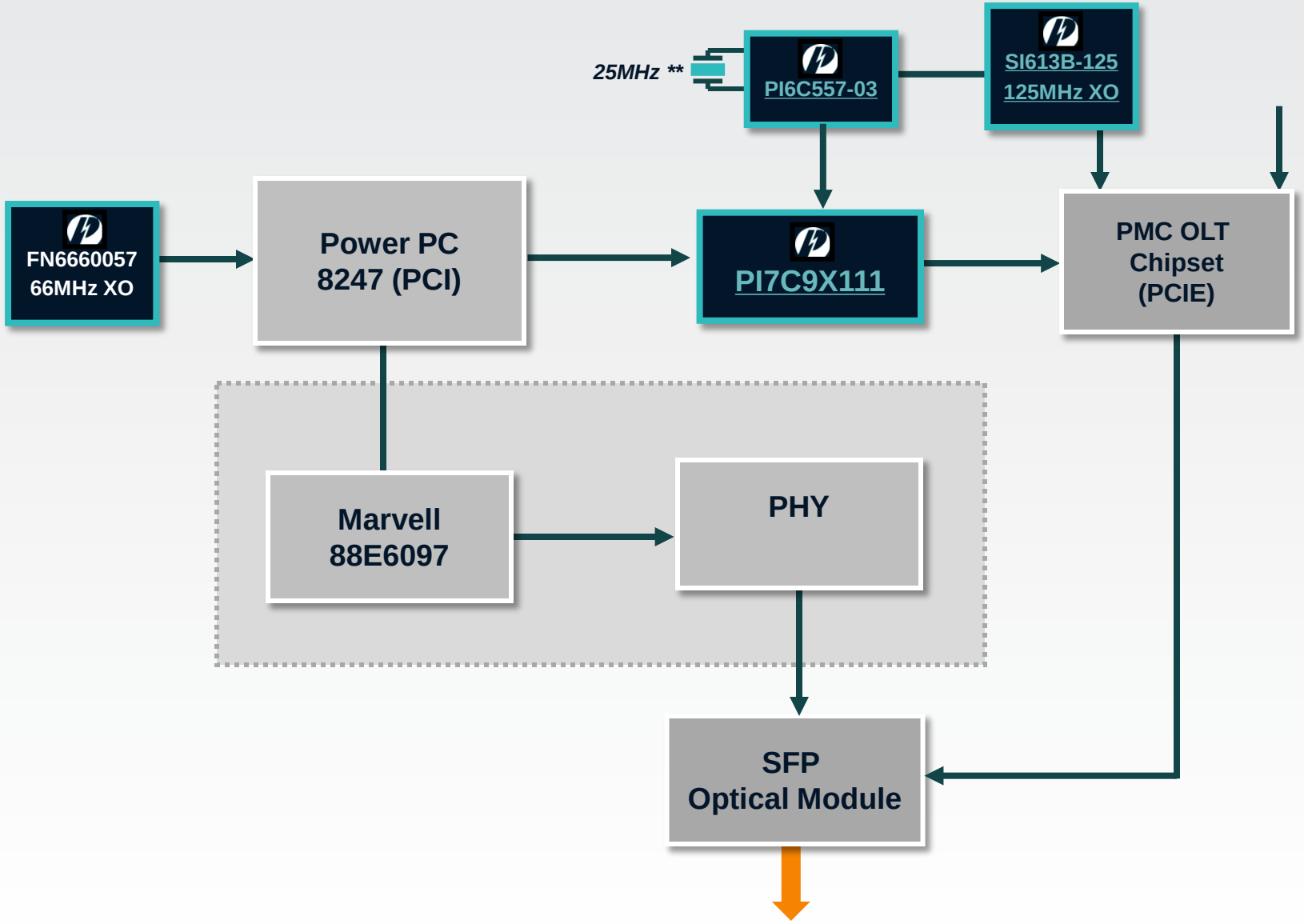

PERICOM
Confidential
Copyright Pericom Semiconductor Corp 2014

10G Switch Board

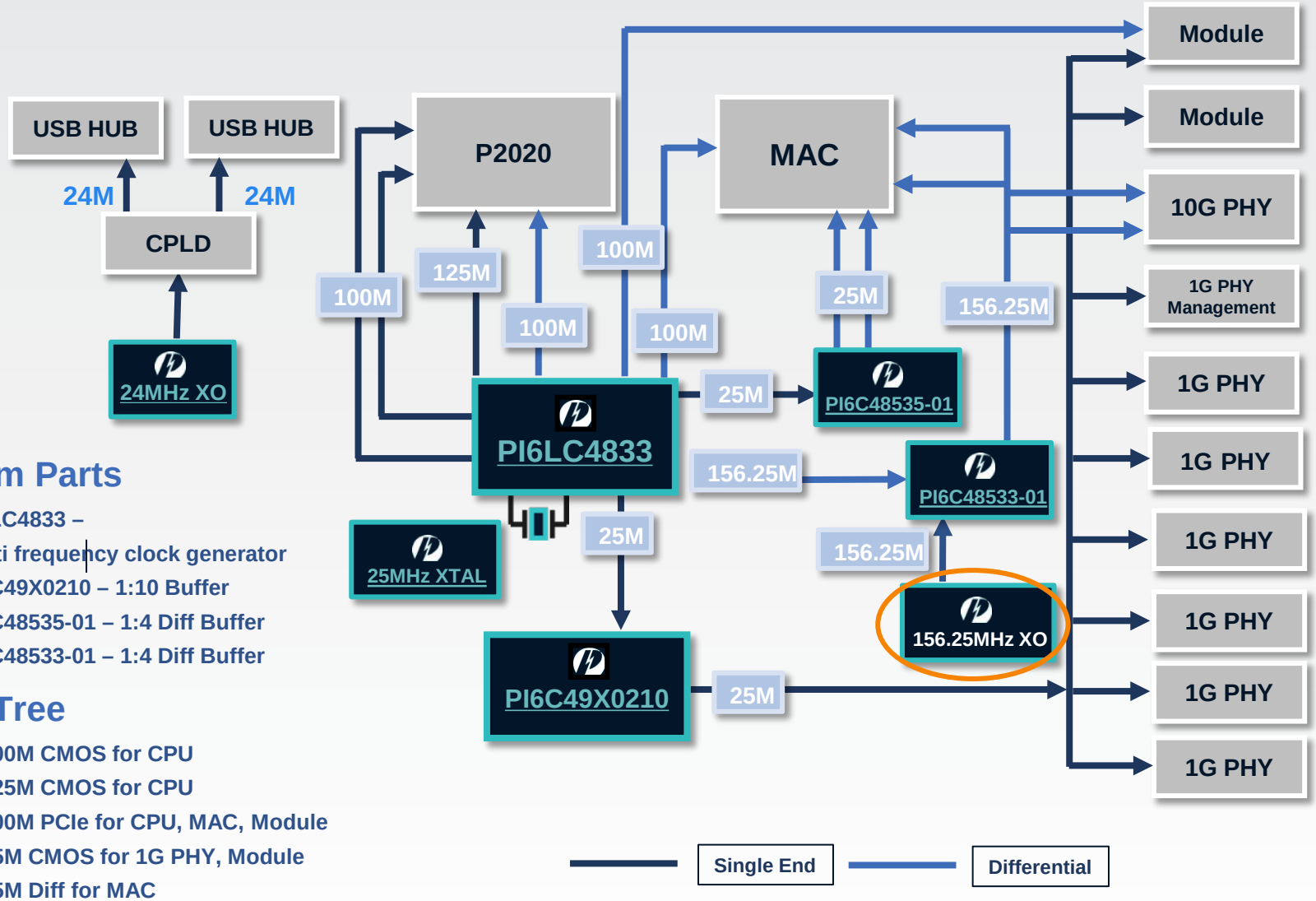

Pericom Parts

- PI6LC4833 –
- multi frequency clock generator
- PI6C49X0210 – 1:10 Buffer
- PI6C48535-01 – 1:4 Diff Buffer
- PI6C48533-01 – 1:4 Diff Buffer

Clock Tree

- 2x100M CMOS for CPU
- 1x125M CMOS for CPU
- 3x100M PCIe for CPU, MAC, Module
- 9x25M CMOS for 1G PHY, Module
- 2x25M Diff for MAC
- 4x156.25M Diff for MAC, 10G PHY

Copyright Pericom Semiconductor Corp 2014

Equalizers can Restore Link Operation

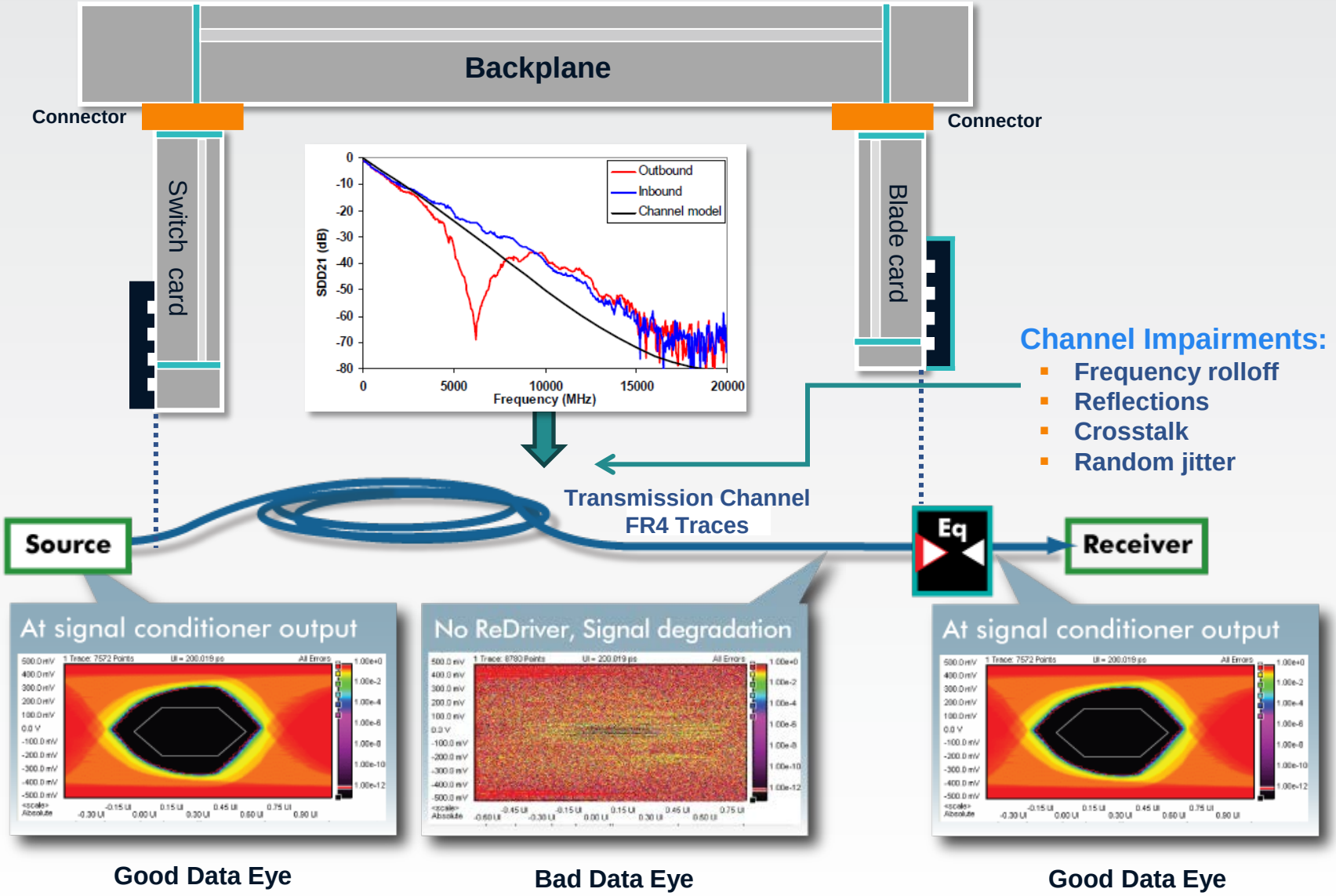

Good Data Eye

Bad Data Eye

Good Data Eye

PERICOM
Confidential
Copyright Pericom Semiconductor Corp 2014

Pericom Offerings in Wireless Infrastructure

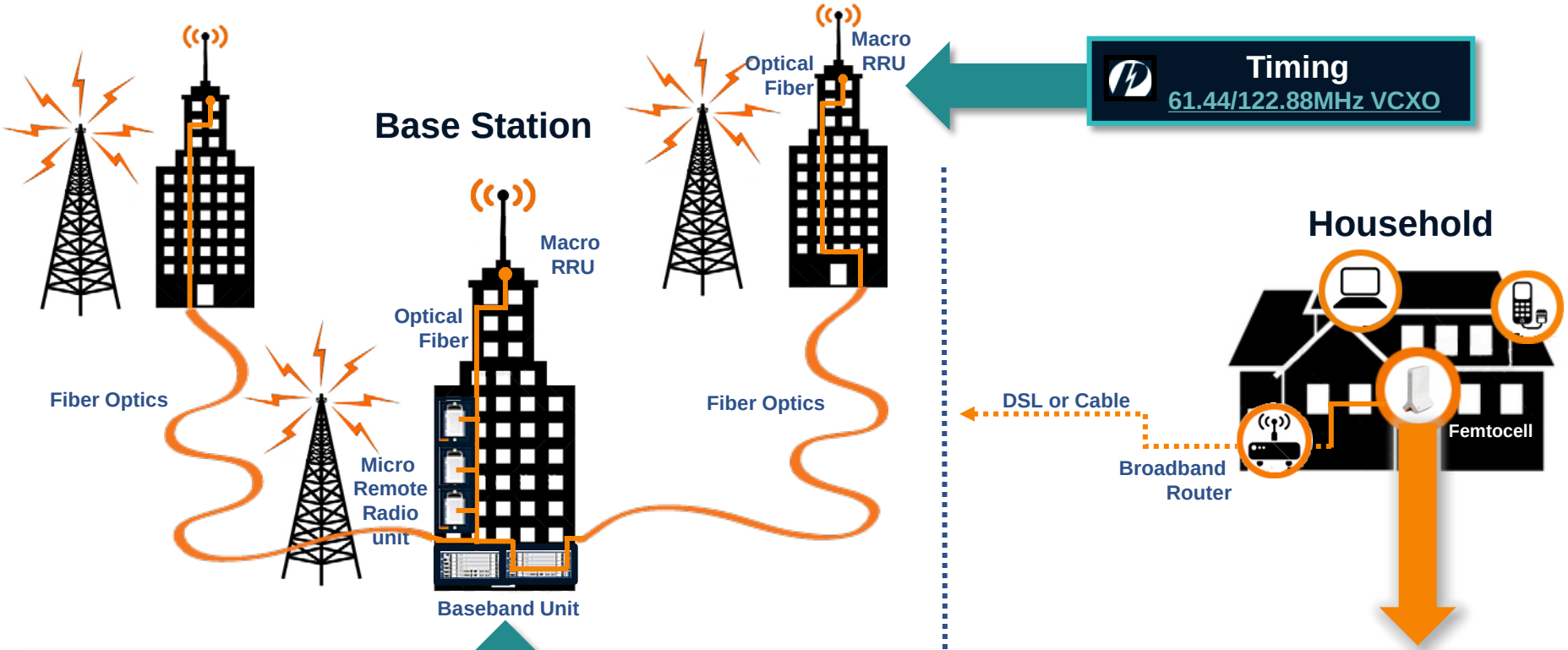

Timing
61.44/122.88MHz VCXO

Jitter Cleaner on clock board & Line Card

XAUI & PCIE & KR ReDriver on Backplane

PCIe (Packet) Switch & Signal Switch

Timing
156.25MHz XO, 10MHz TCXO
HiFlex CLK Gen, Buffer

PCIe (Packet) Switch

Timing
26MHz VCTCXO
Embedded CLK Gen

FemtoCell

Copyright Pericom Semiconductor Corp 2014

Pericom Solution in BBU + RRU in BTS (Sync-E)

→Pericom Parts: ▪ FCP ▪ Clock IC ▪ Jitter Cleaner ▪ ReDriver

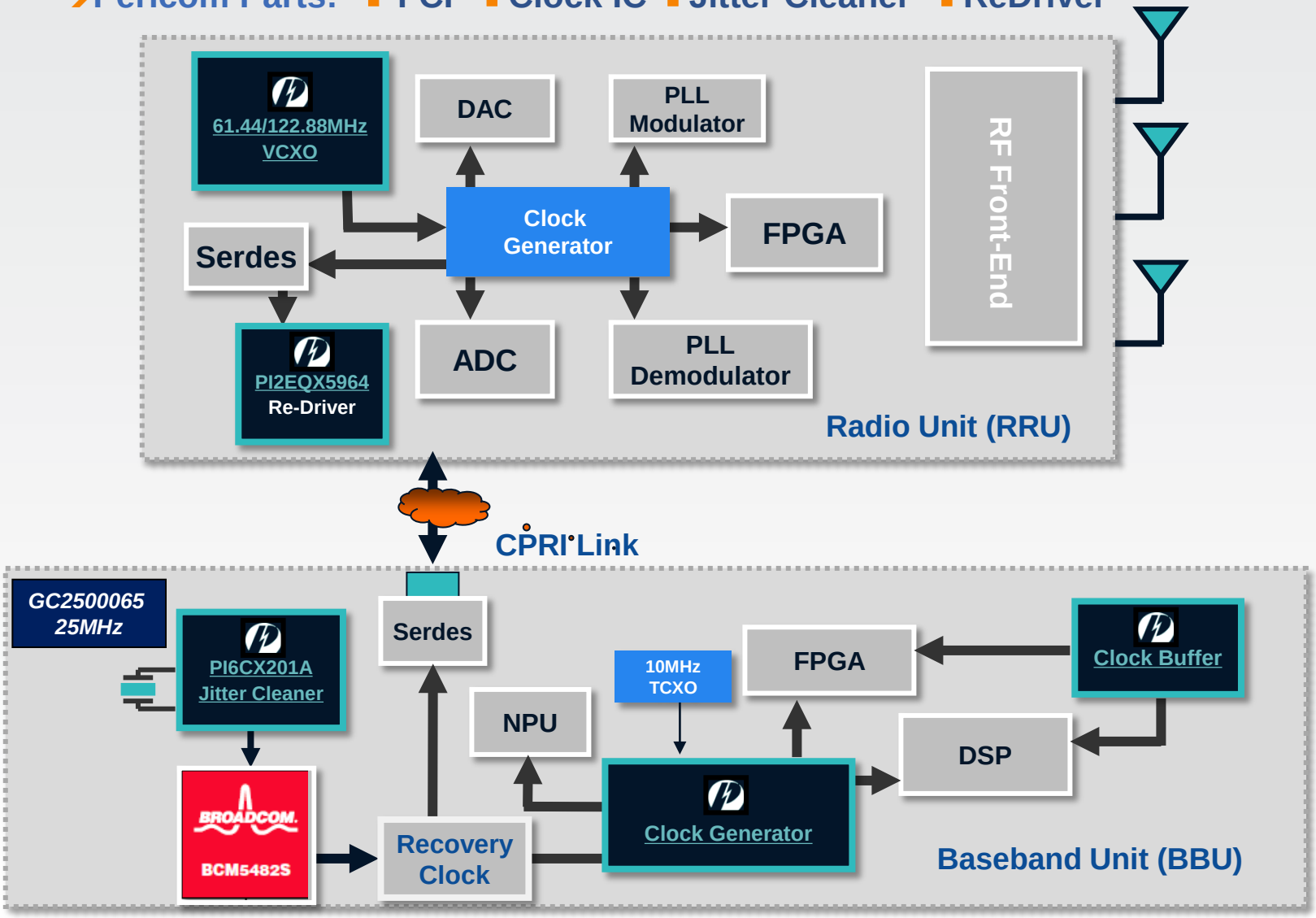

Copyright Pericom Semiconductor Corp 2014

TD-LTE BBU Control Board

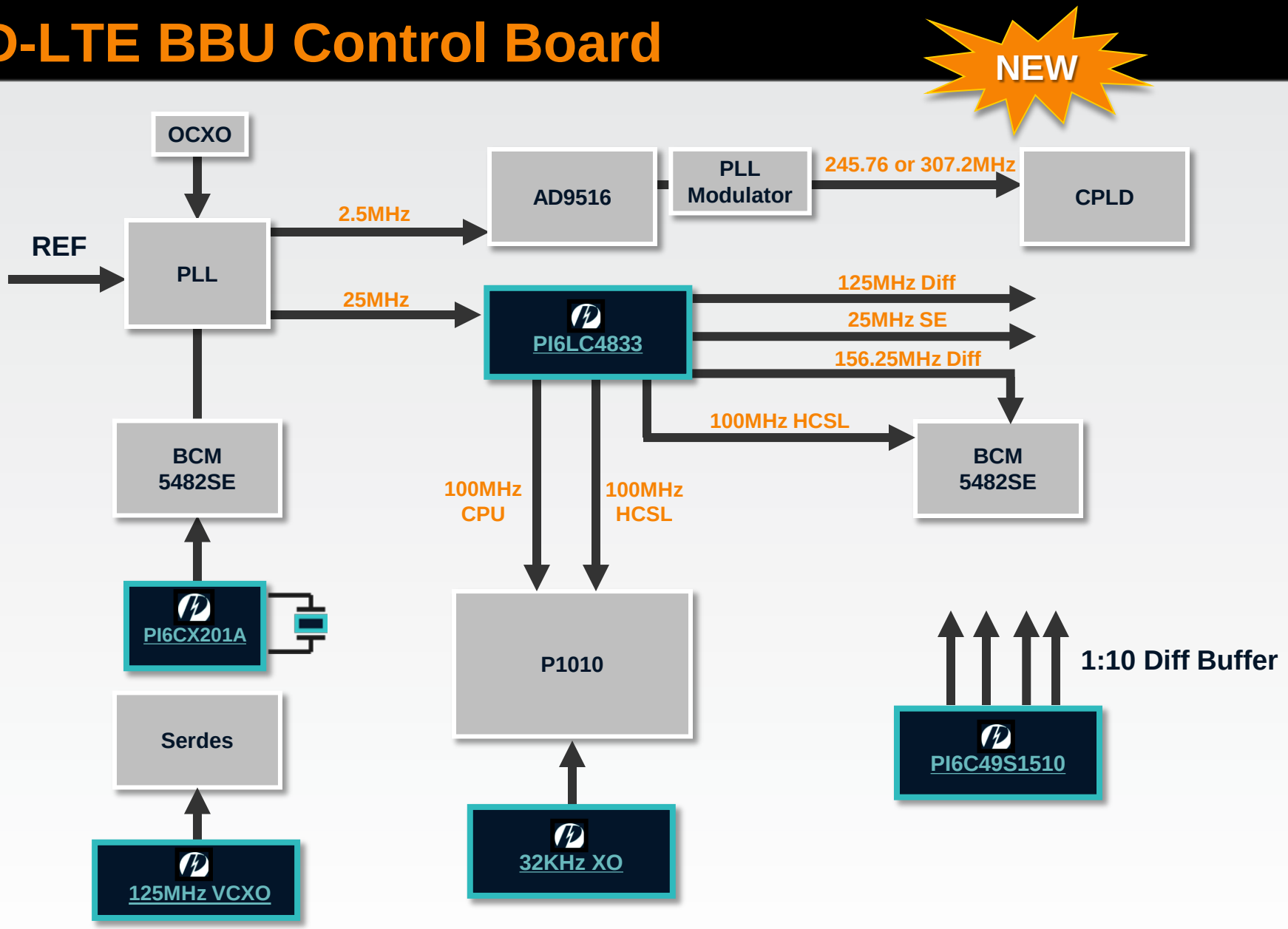

PERICOM
Confidential
Copyright Pericom Semiconductor Corp 2014

LTE/ Wimax BTS -- BBU

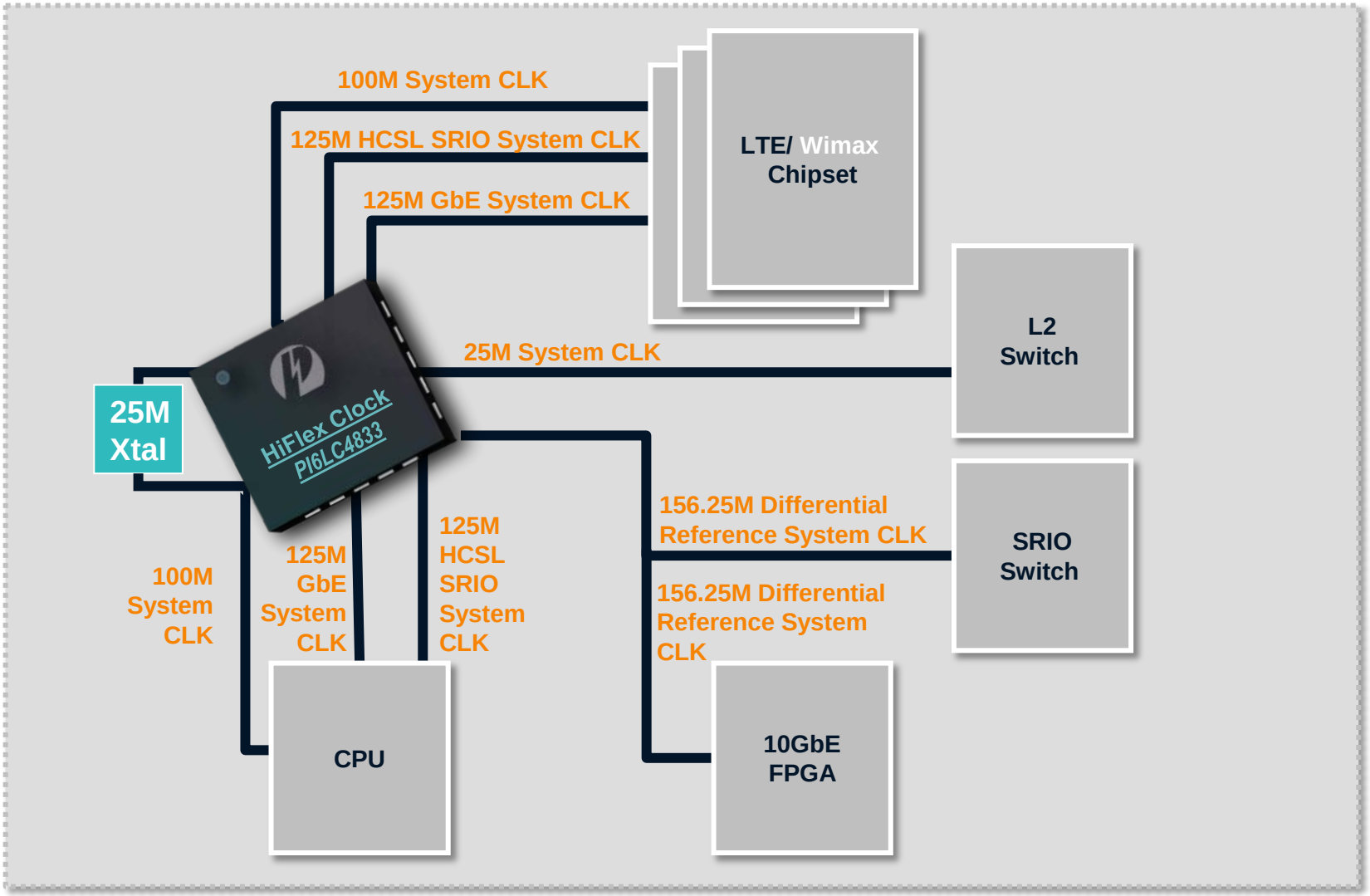

Note: Block diagram shows possible frequency configurations of HiFlex Clock IC, please consult datasheet for more details.

PERICOM
Confidential
Copyright Pericom Semiconductor Corp 2014

High Integration IC for Femtocell BTS

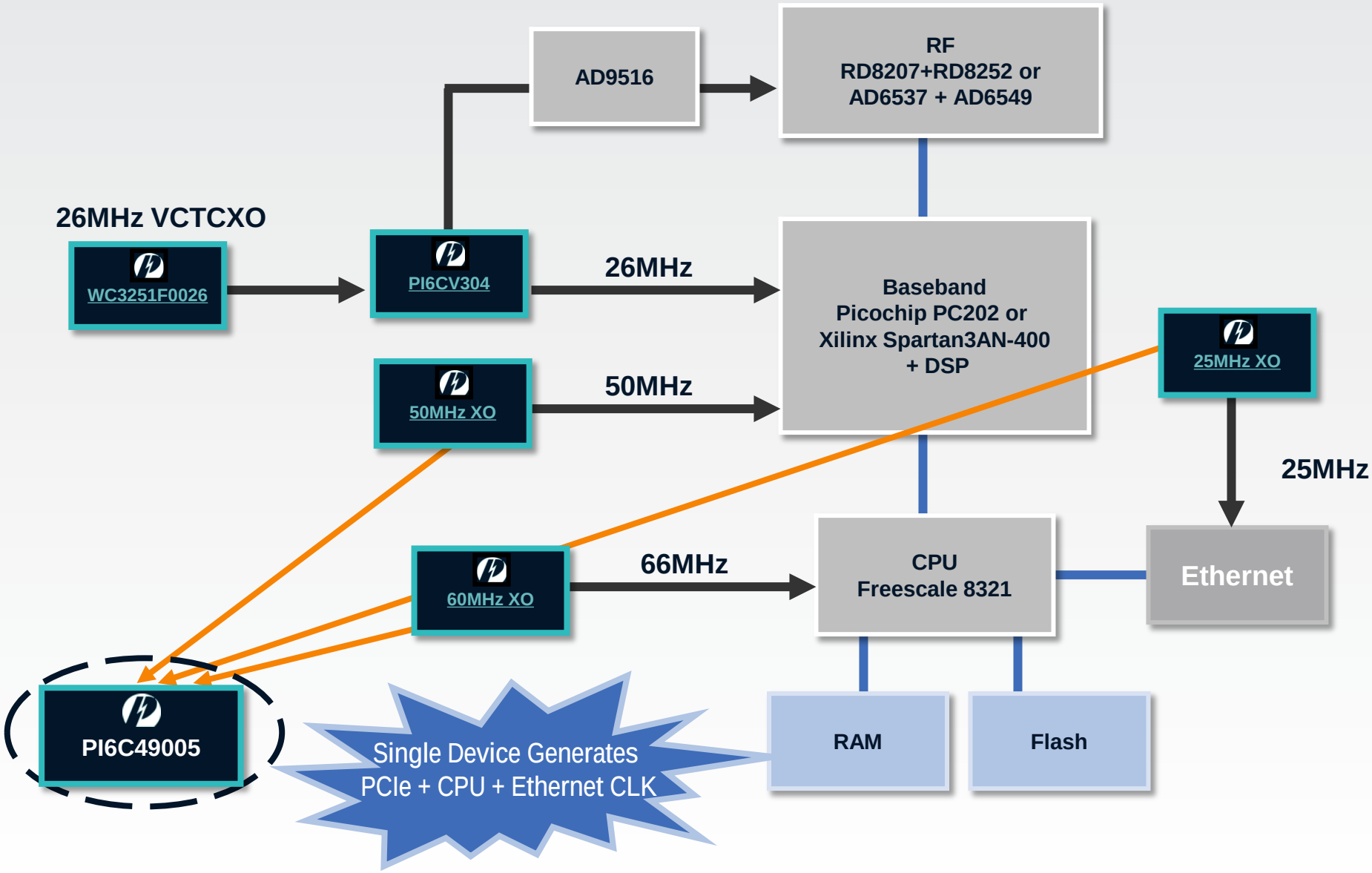

Confidential
Copyright Pericom Semiconductor Corp 2014

Why Pericom Solutions?

→ Focused Segment for Pericom

- Continuous investment in new product development
- Long term commitment for products and services

→ Total timing solutions – FCP + IC

- Vertical Integration – True multi-source XO
- Best performance – Margins for system designs
- User configurable timing IC – Ease of board design
- Cost competitive solutions – Money saving

→ Complete portfolio for high speed serial connectivity

- Packet switch and Bridge – Efficient data throughput
- Redriver – Better system performance
- Analog switch / LDO – Another alternative source

Working with Telecom Customers for over 20 years

Copyright Pericom Semiconductor Corp 2014

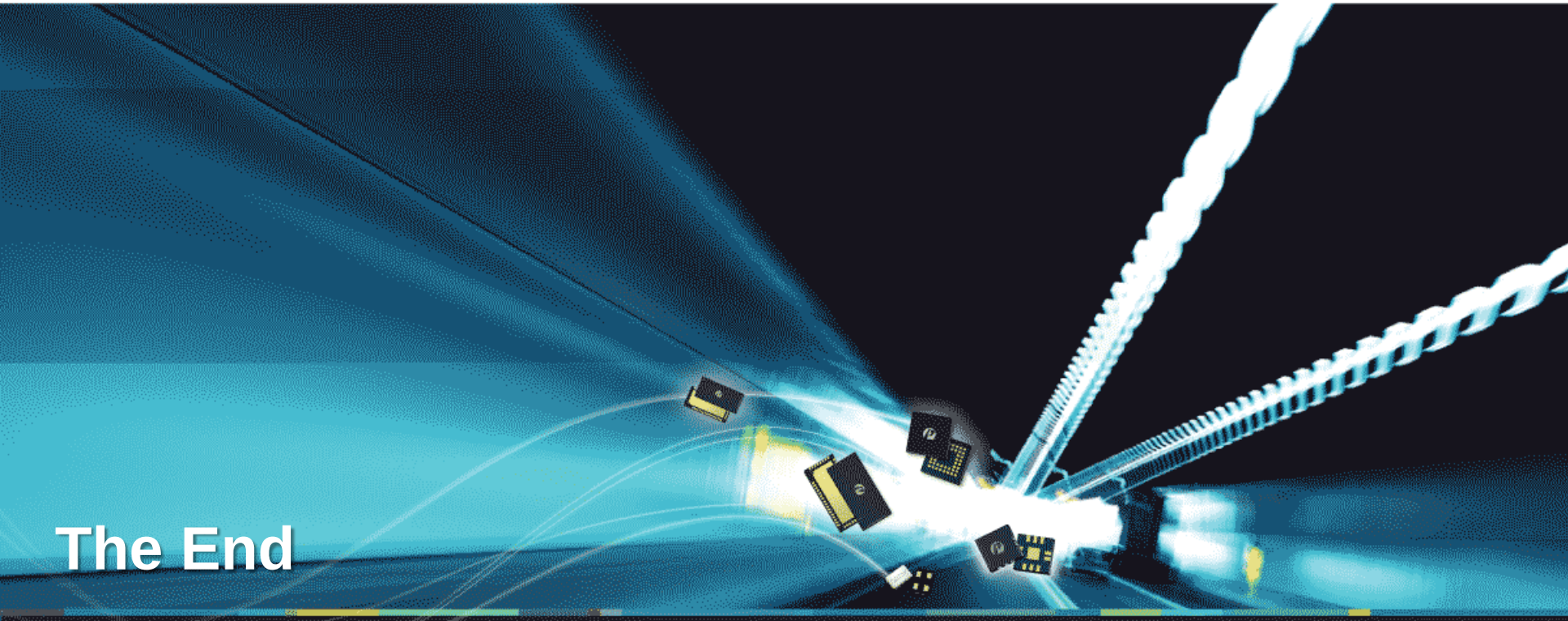

The End

Thank You

Copyright Pericom Semiconductor Corp 2014