PERICOM®

www.pericom.com

Enabling High-speed Serial Connectivity

For all your Timing, Signal Integrity & Connectivity Needs

Pericom Solutions

Industrial PC

Pericom Product Offerings

Primary Product Categories

Signal Integrity
- ReDrivers/ Repeaters
- All major protocols (up to 12Gb)

Timing
- Clocks/Buffers
- Real Time Clock
- Xtal Oscillators XO, VCXO, TCXO
- Crystals

Switching
- Analog Switch
- Digital Switch
- Power Switch
- Interface Logic
- Power Mgmt

Connectivity
- PCIe Bridges
- PCIe Switch
- Video Decoder
- Voltage Reg.
- UART

10GbE

PCI EXPRESS

SUPERSPEED CERTIFIED USB

FibreChannel

CERTIFIED DisplayPort™

SERIAL ATA

Thunderbolt

HDMI™ HIGH DEFINITION MULTIMEDIA INTERFACE

Serial Attached SCSI

Copyright Pericom Semiconductor Corp 2015

Serial Protocol Upgrades: Pericom Focus

Increases in Protocol Speeds Drive Need for Pericom Products

Protocol	2011	2012	2013	2014	2015	2016	Markets
PCI Express	PCIe 2.0 5Gbps PCIe 1.0 2.5Gbps	PCIe 3.0 8Gbps				PCIe 4.0 16Gbps	Computing Server/Storage Networking/ Embedded
SATA/SAS	SATA 2 3Gbps SATA I 1.5Gbps	SAS2/ SATA 3 6Gbps		SAS3 12Gbps			Computing Server/ Storage/ Embedded
USB	USB 2.0 480Mbps	USB 3.0 5Gbps			USB 3.1 10Gbps		Computer, Consumer Embedded Networking
ETHERNET	Ethernet 10Gbps Ethernet 1Gbps		Ethernet 40Gbps (10x4)		Ethernet 100Gbps (25x4)		Networking Telecom Server
HDMI	HDMI 1.4 3.4Gbps			HDMI 2.0 6Gbps			Consumer Computing Video
DISPLAYPORT	DP 1.1 2.7Gbps	DP 1.2 5.4Gbps		DP 1.3 8Gbps			Computing Graphics

Copyright Pericom Semiconductor Corp 2015

Pericom Solution – Industrial PC

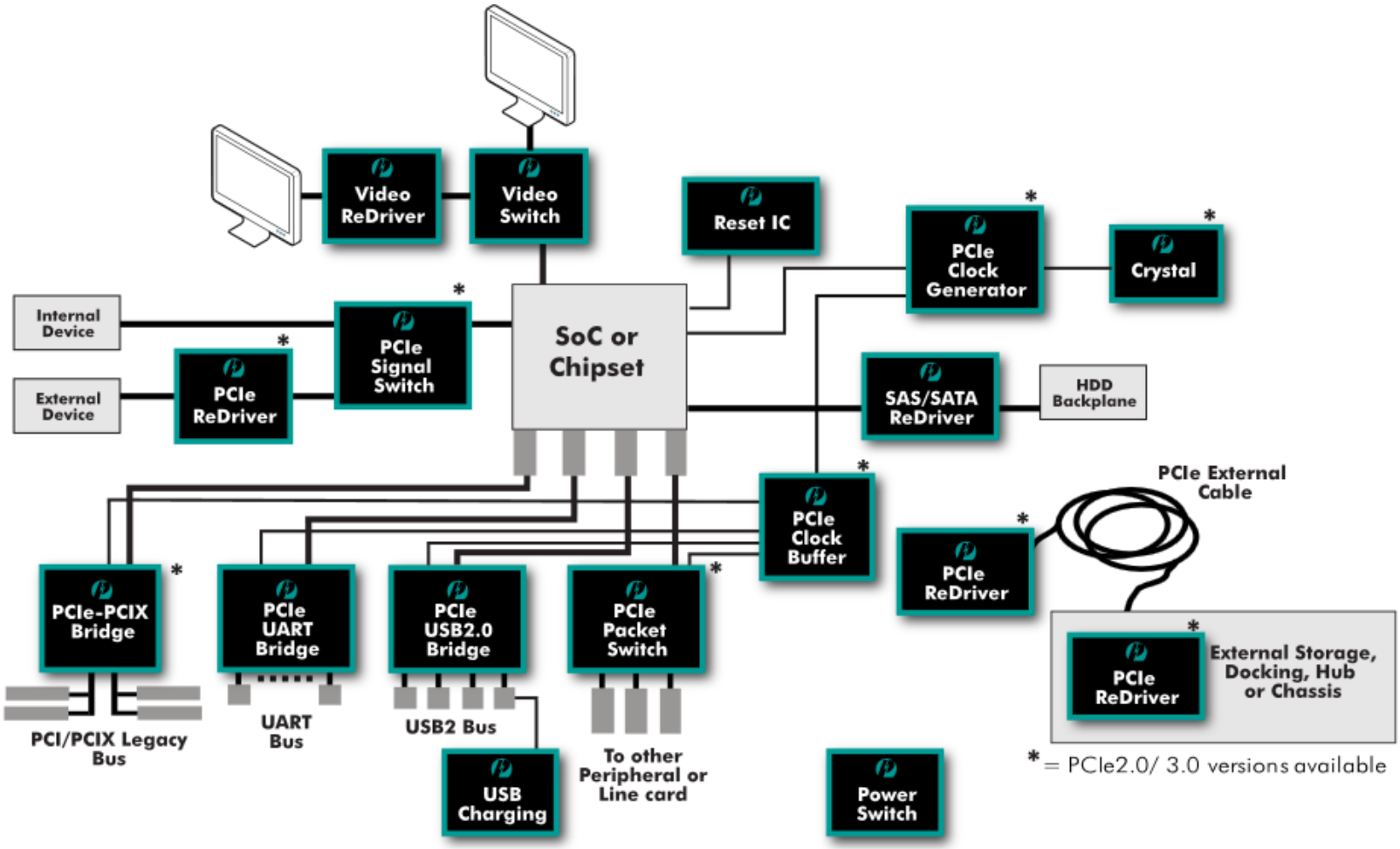

PERICOM PRODUCT OVERVIEW FOR INDUSTRIAL PC APPLICATION

https://www.pericom.com/applications/embedded-systems/industrial-pc/

Copyright Pericom Semiconductor Corp 2015

Industrial PC Segment

PERICOM
Pericom Confidential
Copyright Pericom Semiconductor Corp 2015

Industrial PC SAM by Sub-Segments

POS – Intel X86

- Focus product: Packet Switch/Type C/PCI-E Swtich/I2C

Digital Signage – Intel X86/ARM/MCU

- Focus Product: Packet Switch/Type C/PCI-E Swtich/Video Switch

Medical Care – Intel X86

- Focus Product: Packet Switch/Type C/PCI-E Swtich/Video Switch/I2C

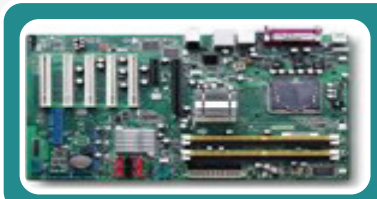

Board Base – Intel X86/ARM/MCU

- Focus Product: Packet Switch/Type C/PCI-E Swtich/Video Switch/I2C

Automotion – ARM/MCU

- Focus Product: Package Switch/Bus Switch/I2C

Pericom Confidential

Copyright Pericom Semiconductor Corp 2015

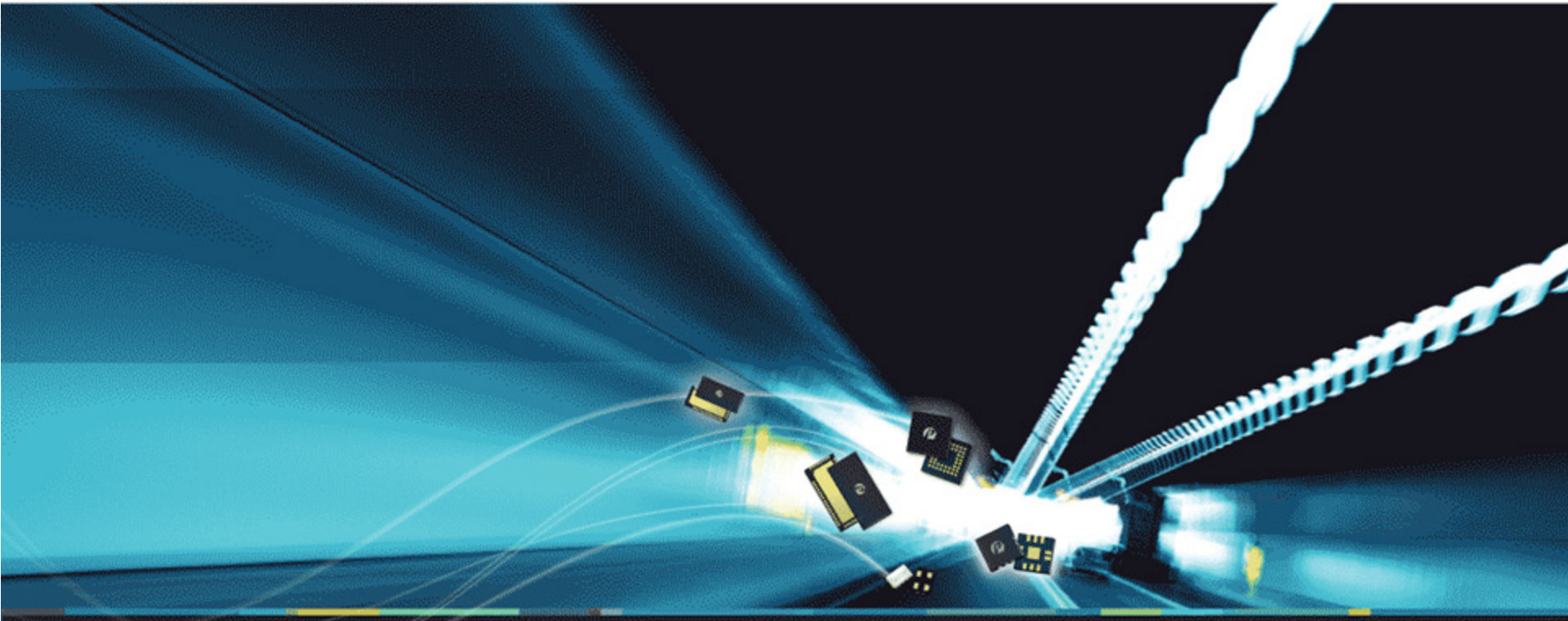

Switches, I2C, and Lever Shifter Product Offerings

Copyright Pericom Semiconductor Corp 2015

2-12 Gbps Differential Signal Switch Portfolio

PCIeG3/10GE @8-10Gbps - 3.3V

PI3PCIE3215
1-Lane, 2 channel
2:1 Mux

PI3PCIE3413
2-Lane, 4 channel
3:1 Mux

PI3PCIE3212
1-Lane, 2 channel 2:1 Mux

PI3PCIE3442
2-Lane, 4 channel
2:2 Matrix Switch

PI3PCIE3415
2-Lane, 4 channel 2:1 Mux

PI3PCIE3242
1-Lane, 2 channel
2:2 Matrix Switch

PI3PCIE3412
2-Lane, 4 channel 2:1 Mux

10-12Gbps -3.3V

PI2DBS12412-A
2-Lane 2:1 Mux
10-12Gbps

PI2DBS12212-A
1-Lane 2:1 Mux
10-12Gbps

PCIeG2 @ 5.0Gbps – 3.3V

PI3PCIE2612-A
PCIE / DP mux, ATX pin

PI3PCIE2415
2-Lane, 4 channel
2:1 Mux

PI3PCIE2215
1-Lane, 2 channel
2:1 Mux

PCIeG2 @ 5.0Gbps– 1.5 to 1.8V

PI2PCIE2422
2-Lane, 4 channel
2:1 Mux + Bypass

PI2PCIE2214
1-lane, 2 channel
4:1 Mux

PI2PCIE2412
2-Lane, 4 channel
2:1 Mux

PI2PCIE2212
1-Lane, 2 channel
2:1 Mux

PI2PCIE2442
2 lane, 4 channel
2x2 Exchange

DDR3/DDR4 1.5V-3.3V 4.266 GT/s

PI2DDR3212
14 bit 2:1 DDR3/4
Switch 1.5V/1.8V

PI3DDR4212
12 bit 2:1 DDR3/4
Switch 1.8v/3.3V

Differential Broadband SAS2/SATA2/XAUI/TB/10GE – 1.5 to 1.8V, 3.3V

PI2DBS212
3.2Gbps, 1.5-1.8V
SAS,SATA2,XAUI
1-Lane, 2 channel 2:1 Mux

PI2DBS6212
6.5Gbps , 1.5-1.8V
SAS2,SATA3,XAUI
1-Lane, 2 channel
2:1Mux/Demux

Legend
Production
Sampling
In Development

Pericom Confidential
Copyright Pericom Semiconductor Corp 2015

Pericom I2C Mux/Switches Family

Mux/Switches Family

- Master Selector Interrupt & Reset

2:1 Mux/Switches

- Mux PI4MSD5V9540
- Mux Interrupt PI4MSD5V9542
- Switch Interrupt & Reset PI4MSD5V9543

4:1 Mux/Switches

- Mux Interrupt PI4MSD5V59544
- Switch Interrupt & Reset PI4MSD5V9545
- Switch Interrupt & Reset PI4MSD5V9546/9646/9846

8:1 Mux/Switch

- Mux & Reset PI4MSD5V9547
- Switch & Reset PI4MSD5V9548

MULTIPLEXER

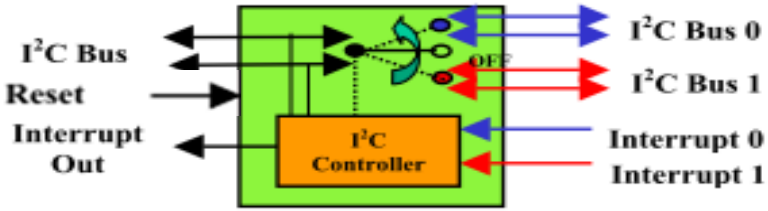

Can only select one downstream channel at a time

SWITCH

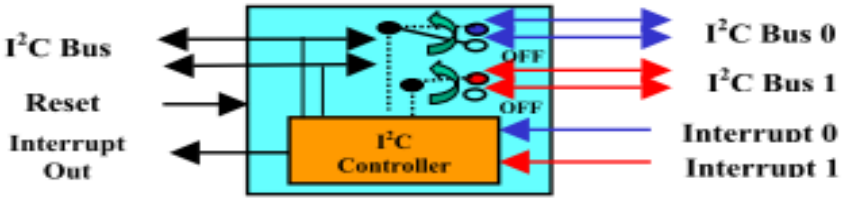

Can select one channel at a time like multiplexer or multiple channels can be selected for broadcast mode

PERICOM
Pericom Confidential
Copyright Pericom Semiconductor Corp 2015

I2C ULS/IO Expander/Mux at Server

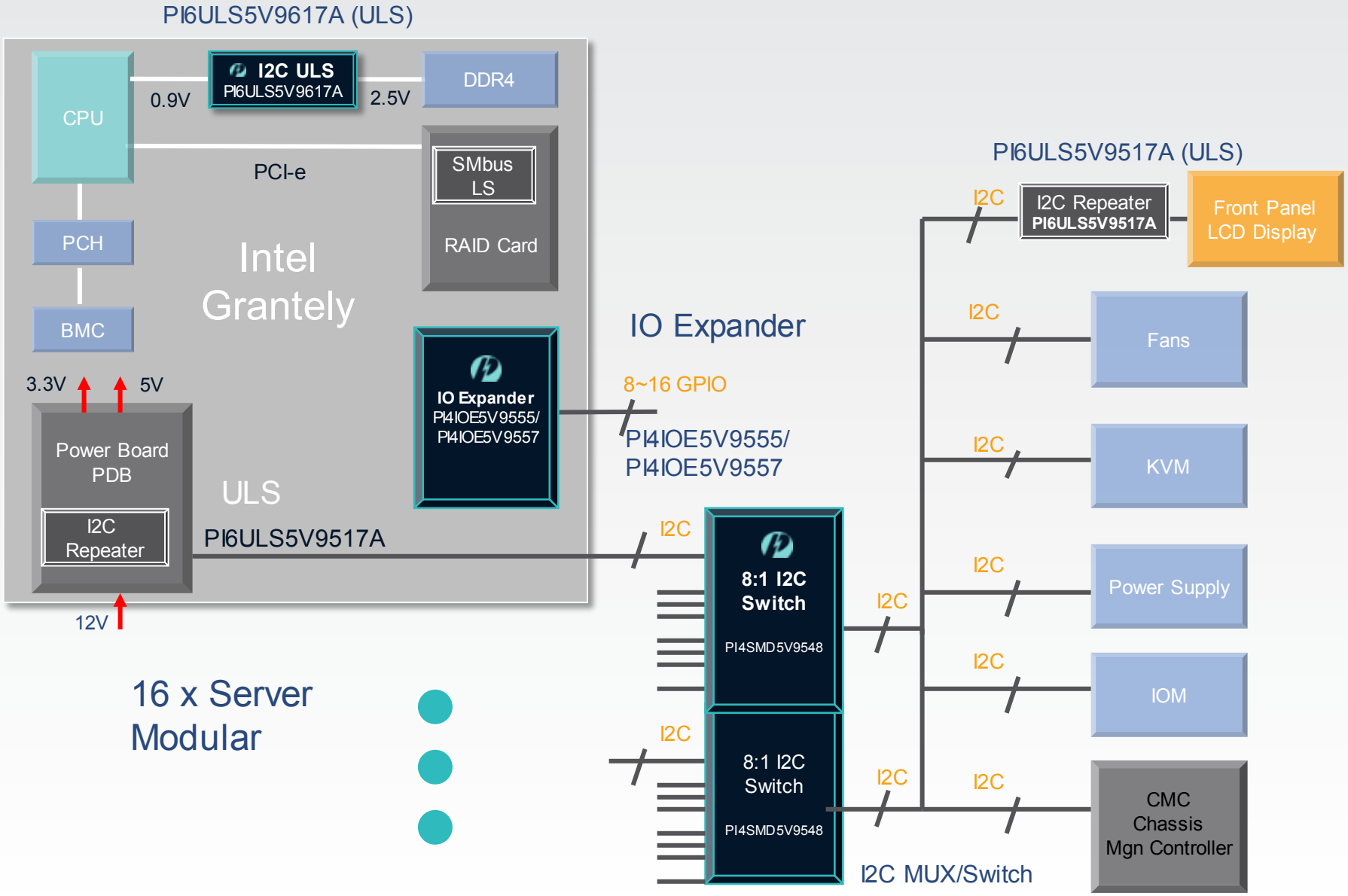

PERICOM
Pericom Confidential
Copyright Pericom Semiconductor Corp 2015

USB3.0 / 2.0 Switch Portfolio

USB

USB2. 0 to 3.0–5.0Gbps

PI3USB3102
2-Port, 32Pin-TQFN
USB3.0 & 2.0 Switch

PI3USB302A
2-Port, 20Pin-QFN
USB3.0 Switch

PI3USBH22
2-Port, 16Pin-TQFN
USB2.0 & MHL Switch

PI3USB223
2-Port, 10Pin-UQFN
USB2.0 & Audio Switch

PI3USB103
2:1 Mux/DEMux,10Pin-TQFN
USB2.0 with Vbus Short Protection

PI3USB102
2:1 Mux/DEMux,10Pin-TQFN
USB2.0 Compliant (3.3V)

In Production

3.3V, Small Package
Very Low Power

PI3USB304
2-Port,42Pin-TQFN
Dual USB3.0 Switch

PI3USB102E
2:1 Mux/DEMux,10Pin-TQFN
USB2.0 with 5V Protection

Sampling Now

3.3V, Smaller Package
Very Low Power

PI3USB105
2-Port,16Pin-TQFN
USB Switch with Auto-Detect

PI3USBMA556
USB,16Pin-TQFN
With MHL & Audio Switch

Planned Development

USB 10Gb

Legend

Production

Sampling

In Development

Pericom Confidential

Copyright Pericom Semiconductor Corp 2015

Analog Switch Product Portfolios

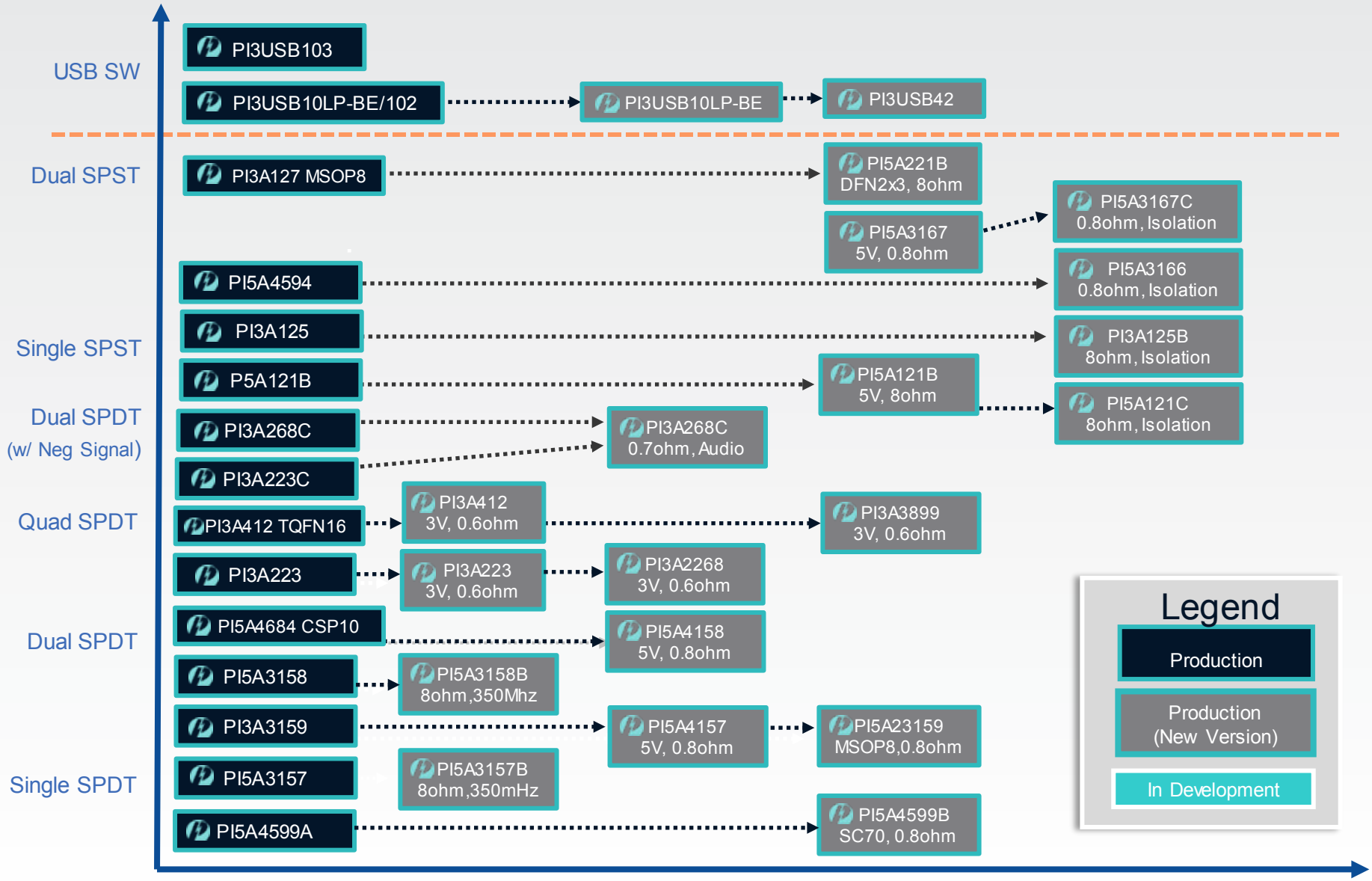

PERICOM
Pericom Confidential
Copyright Pericom Semiconductor Corp 2015

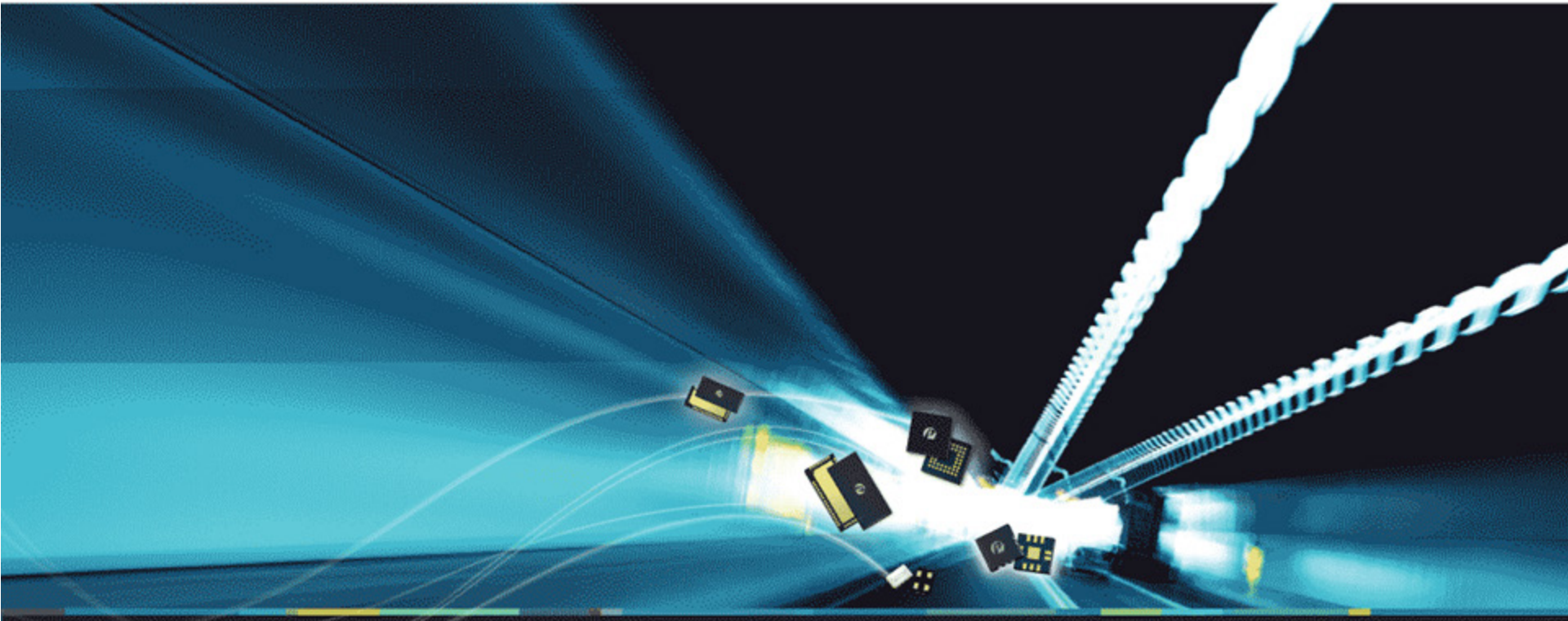

PCIe Packet Switch/Bridge, PCI Bridge, UART

Copyright Pericom Semiconductor Corp 2015

PCIe Packet Switch/ Bridge, PCI Bridge, UART

- Low power dissipation
- Wider range temperature -40~ +85˚C
- Small QFP , QFN , BGA packages

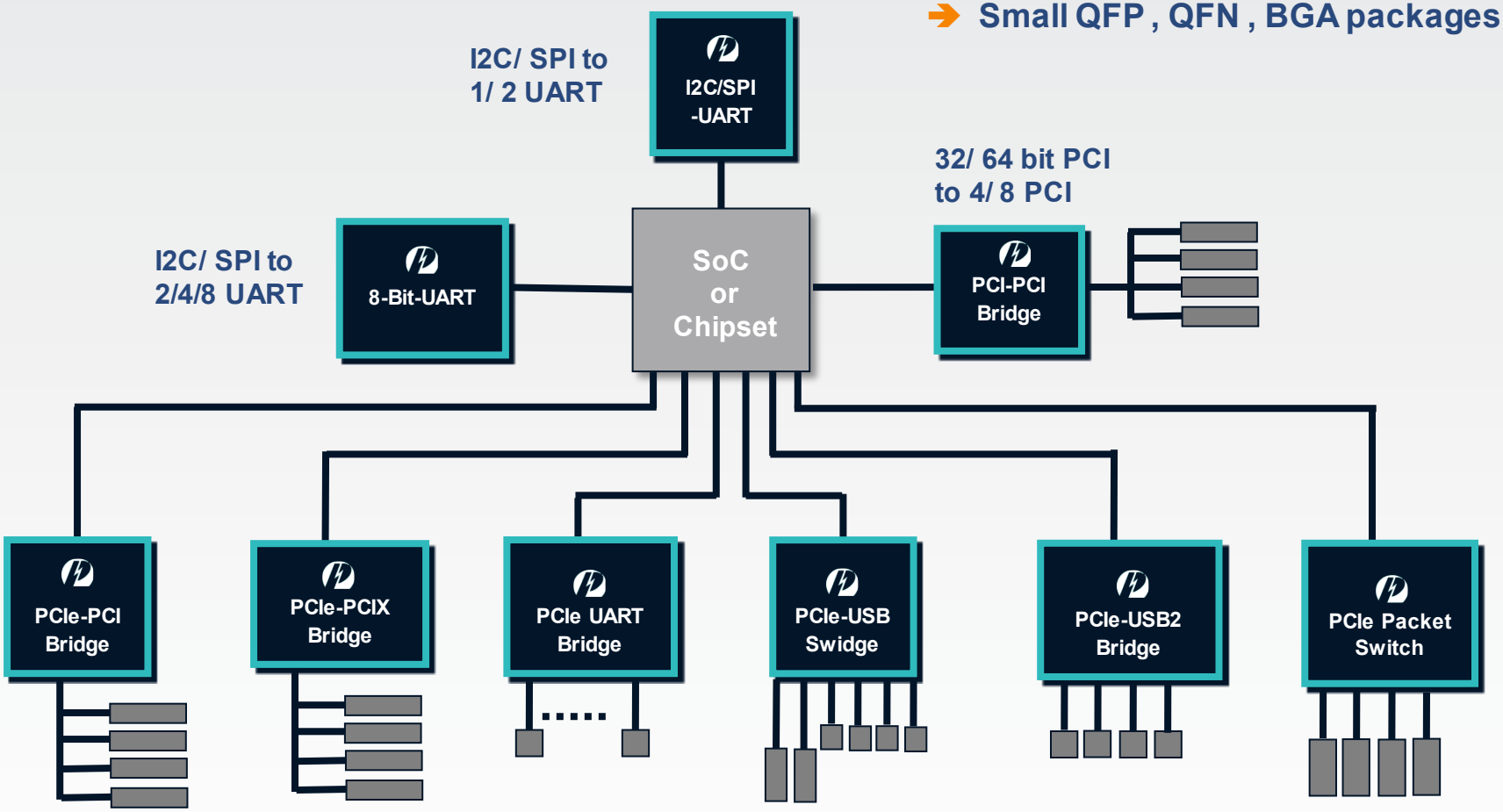

PCIe to 4/8
32bit PCI

x4 PCIe to 6
64bit PCIX

x1 PCIe to
2/ 4/ 8 UART

x1 PCIe to
2 x1 PCIe +
4 USB2

x1 PCIe to
4 USB2

PCIe 1.1/ 2.1
3-6 ports/ 3-12 lanes

PERICOM
Confidential
Copyright Pericom Semiconductor Corp 2015

Focusing Segment

→ Connect ASIC at Multiple Segments

Product	Embedded	Network/ Telecom	Server/ Storage	PC/ WorkStation
PCIe/ PCI Bridge	x	x	x	x
PCIe Packet Switch	x	x	x	x
USB Swidge	x	x	x	x
Video decoder	x			x
UART	x	x	x	x
Sub Segment/ Application	IPC, MFP, POS, Medical, DVR/ NVR, Peripheral, Automotive, Smart Meter	Wireless AP, Switch Router, Set-top Box, Gateway, IAD, Basestation	NAS, RAID, Riser card, HBA	MB, HBA, Combo card

Confidential
Copyright Pericom Semiconductor Corp 2015

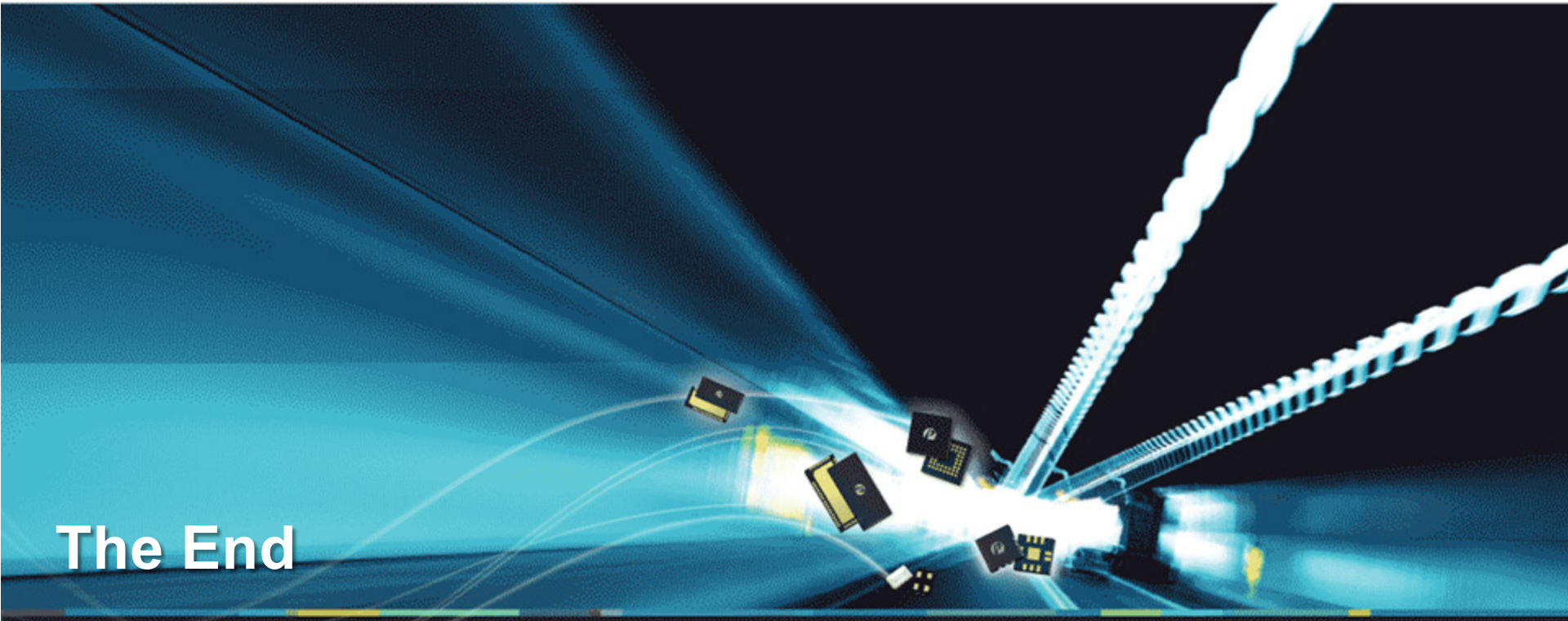

The End

Thank You

Copyright Pericom Semiconductor Corp 2015