DOCUMENT CONTROL NO.
PD - 1204

REVISION: F
DATE: 10/22/07

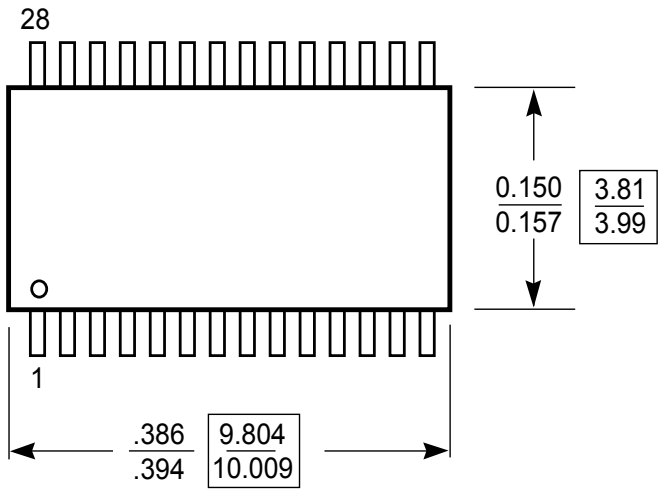

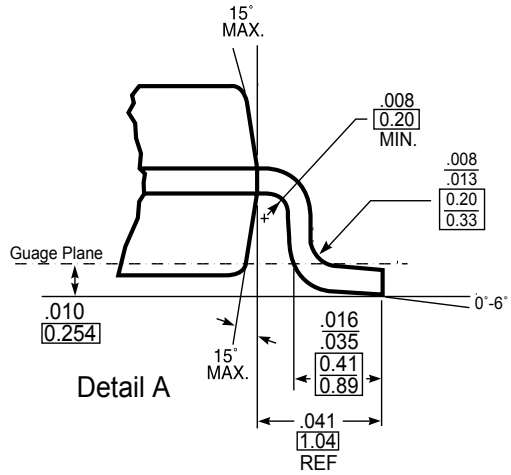

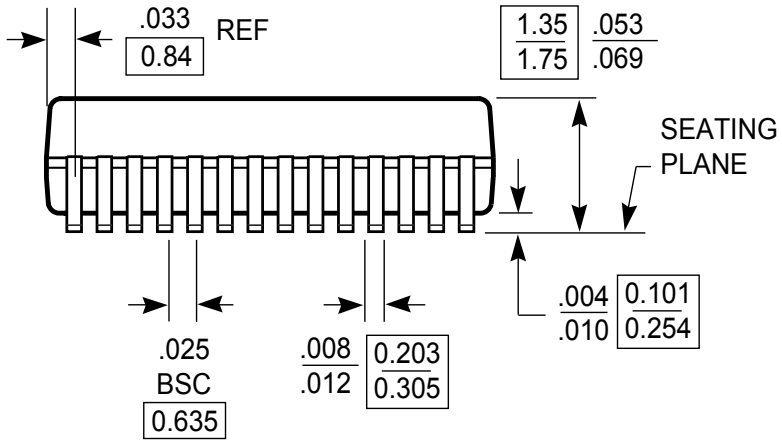

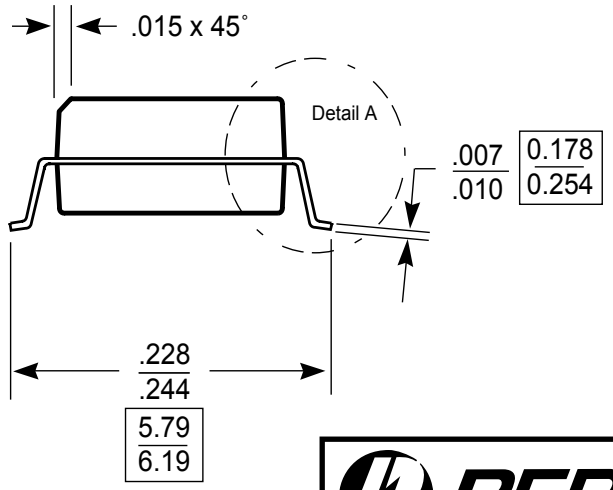

X.XX / X.XX DENOTES DIMENSIONS IN MILLIMETERS

Note:
1) Controlling dimensions in inches.
2) Ref: JEDEC MO-137B/AF
3) Dimensions do not include mold flash, protrusions or gate burrs

PERICOM®
Pericom Semiconductor Corporation
3545 N. 1st Street, San Jose, CA 95134
1-800-435-2335 • www.pericom.com

DESCRIPTION: 28-Pin, 150-Mil Wide, QSOP

PACKAGE CODE: Q