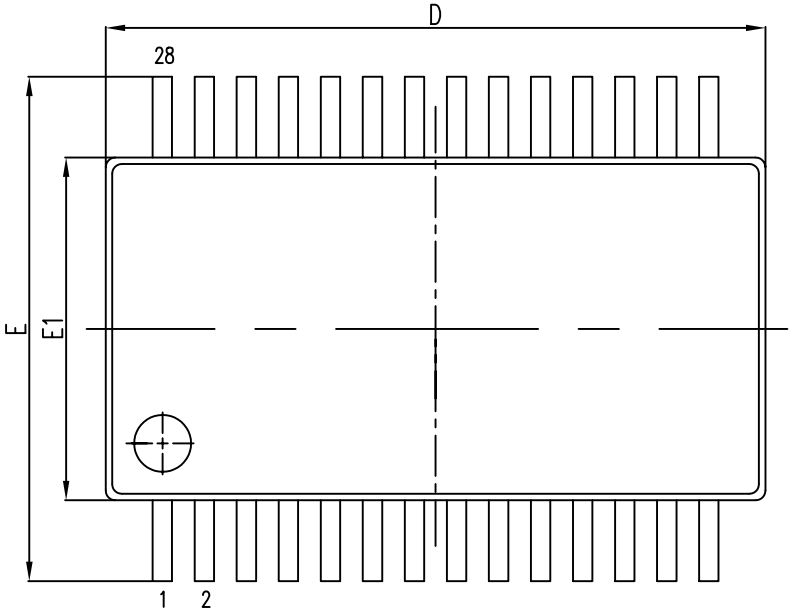

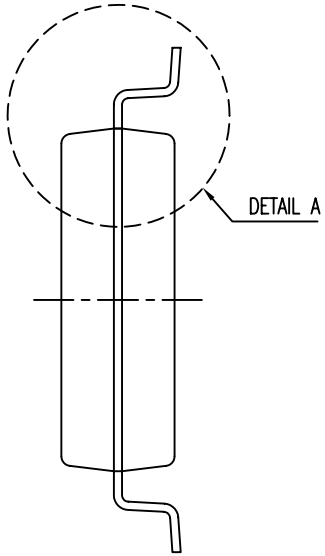

SYMBOL	COMMON DIMENSION MILLIMETERS		
	MIN.	NOM.	MAX.
A	--	--	2.0
A1	0.05	--	--
A2	1.65	1.75	1.85
b	0.22	--	0.38
b1	0.22	0.30	0.33
c	0.09	--	0.25
c1	0.09	0.15	0.21
E	7.40	7.80	8.20
E1	5.00	5.30	5.60
D	9.90	10.20	10.50
e	0.65 BSC		
L	0.55	0.75	0.95
L1	1.25 REF.		
R1	0.09	--	--
θ	0°	4°	8°

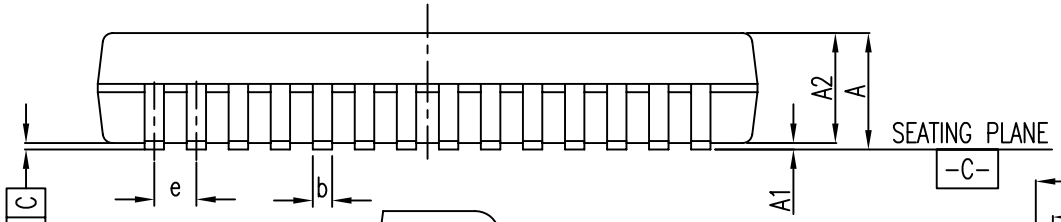

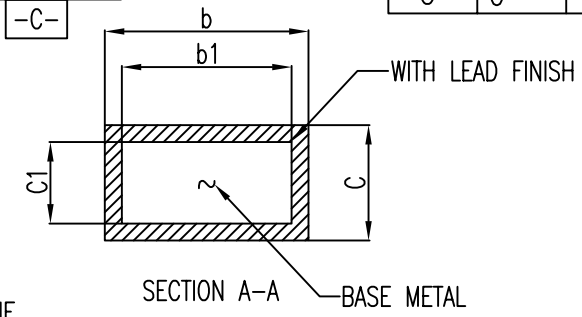

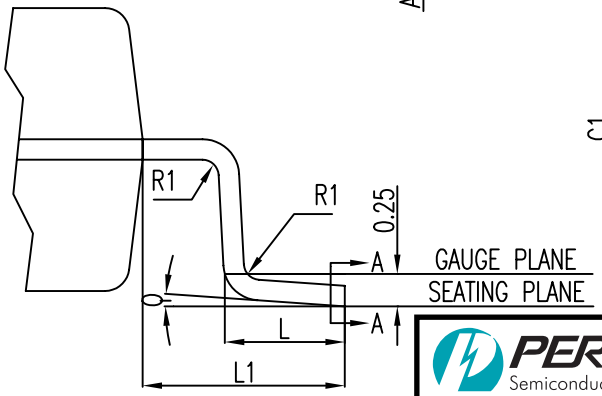

DETAIL A

NOTE:

1. Controlling dimensions in millimeters
2. Ref.: JEDEC MS-150B/AH
3. Package Outline Exclusive of Mold Flash and Metal Burr

PERICOM® Semiconductor Corporation

DATE: 04/10/08

DESCRIPTION: 28-Pin, 209-Mil Wide, SSOP

PACKAGE CODE: H28

DOCUMENT CONTROL #: PD-1250

REVISION: F

08-0143